NULITE

Design Luxy R&D

article: 24080B
code: 4NL2420

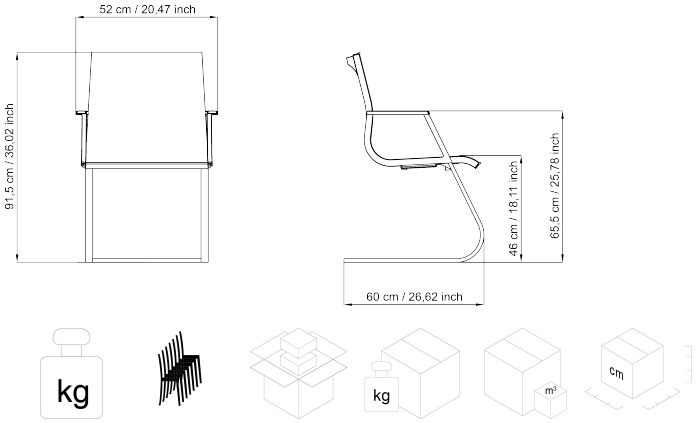

17	no	1	19	0,26	90x63 x62,5

UNI ISO 9227 | UNI EN 1335

Patent: 10022644
Warranty: 5 years

DESCRIPTION

Visitor chair, medium backrest, with chromed aluminum armrests, chromed structure.

FINISHING: Chromed or painted with white and black epoxy powders with anti-scratch treatment.

BACK: mesh.

SEAT: mesh.

STRUCTURE: seat/back structure in high resistance steel tube 25x28 mm thickness 1,5 mm, with chrome plated or white epoxy powder finish and anti-scratch treatment.

ARMRESTS: in die-cast aluminum with chromed or epoxy powder painted finish, white or black anti-scratch epoxy powders; with padded steel insert and lining to match the seat and back.

UPHOLSTERY: 24000 SERIES: not removable upholstery, self-supporting mesh upholstery flame retardant (Class 1) with leather trim.

MAINTENANCE

CHROME PLATED PARTS: Clean with a soft cloth with some neutral detergent to polish the steel.

PAINTED PARTS: Clean with soft cloth dampened slightly with water and dry with a dry cloth.

PLASTIC PARTS: Use soft cloth dampened slightly with water, without insistance, then dry with a dry cloth.

ALUMINIUM PARTS: To clean use only specific products to polish metal parts in order to reduce the
natural oxidation due to the hands contact. The aluminum parts tarnish naturally. LUXY recommends not using chemical detergents.

FABRIC: Fabric: pour some drops of neutral detergent on a damp and wringed out cloth, rub gently on the seat and leave it dry. See maintenance instructions on LUXY upholstery book. Luxy recommends using ecological products.

LETHER: Leather is a natural product. Imperfections give to the material its unmistakable aspect. In presence of marks, they have to be removed with a soft wool cloth. In case of ingrained stains, use only products for leather coloured with aniline. Do not expose leather to direct sunlight. Luxy recommends using ecological products.

CASTORS/FEET: For the enduser security and for different types of floor, different types of
castors are available, as per security rules:
- hard castors for sift floors
- rubber castors for hard floors (standard).

MATERIAL AND RECICLABILITY

32,00 %	3,00 %	12,00 %	0,00 %	0,00 %	6,00 %	47,00 %	91,17 %
STEEL	POLYAMIDE	CARTON	WOOD	POLYPROPYLENE	FOAM	ALUMINIUM	RECYCLABLE

09/2020